Revision Notes.				
R1 -				
APA:	Drawn:-	Checked:-	Approved:-	Date: -

VIEW A

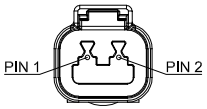

MALE MATING FACE

PIN #	WIRE COLOUR	DESCRIPTION
1	RED	12-24VDC
2	BLACK	GROUND

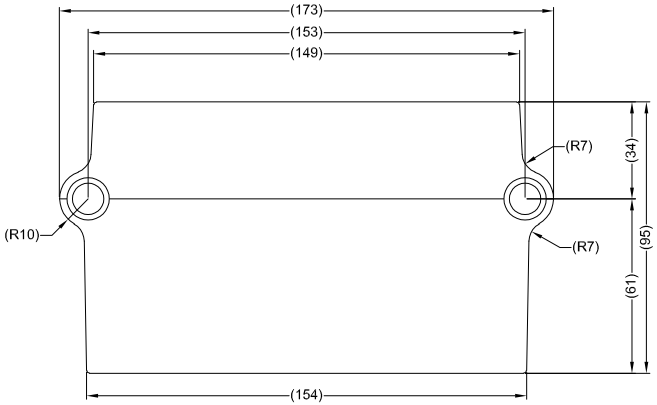

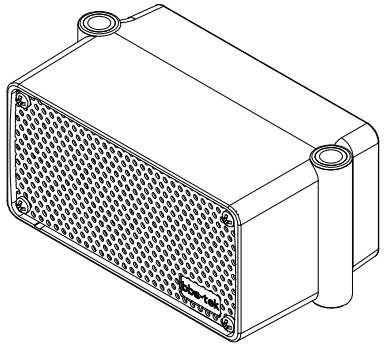

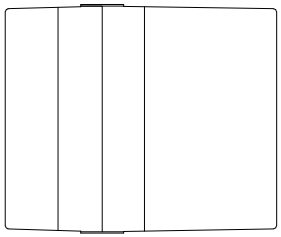

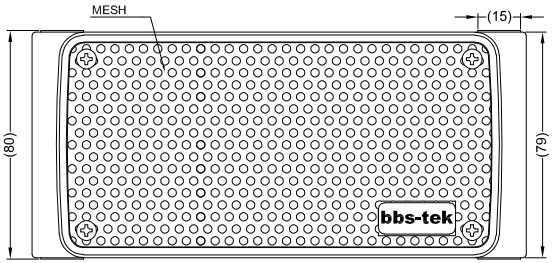

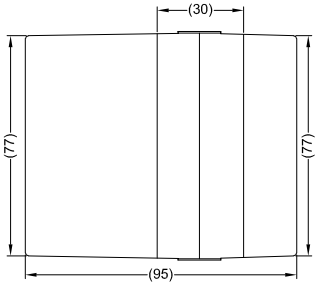

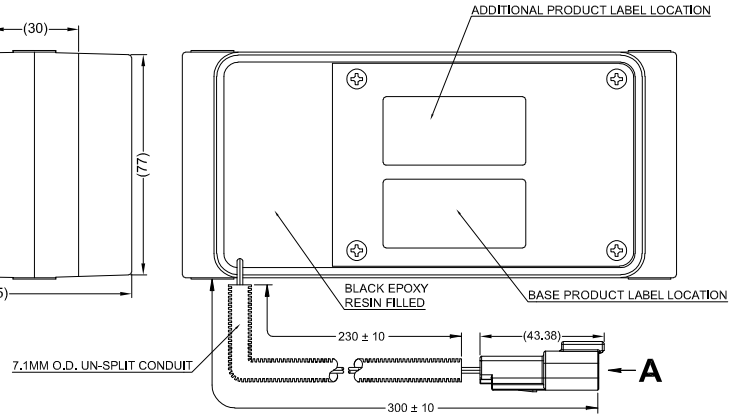

DT04-2P DEUTSCH CONNECTOR
HOUSING - P/N: DT04-2P
WEDGELOCK - P/N: W2P
TERMINALS - P/N: 0460-202-16141

CHANGES FROM BASE PRODUCT SA-BBS-107 (1400) TO SA-BBS-107(DC) (6170)

CHANGE:
1. DEUTSCH CONNECTOR ADDED TO 12/24V AND GND WIRES
2. ADDITIONAL PRODUCT LABEL SA-BBS-107(DC) (6170) ADDED
3. FITTING LABEL REMOVED FROM CABLE.
4. 7.1MM OD CONDUIT ADDED TO CABLE.
5. SA-BBS-107 (1400) GIFTBOX LABEL REPLACED WITH SA-BBS-107(DC) (6170) GIFTBOX LABEL.

OPERATION:
1/ SAME AS BASE PRODUCT

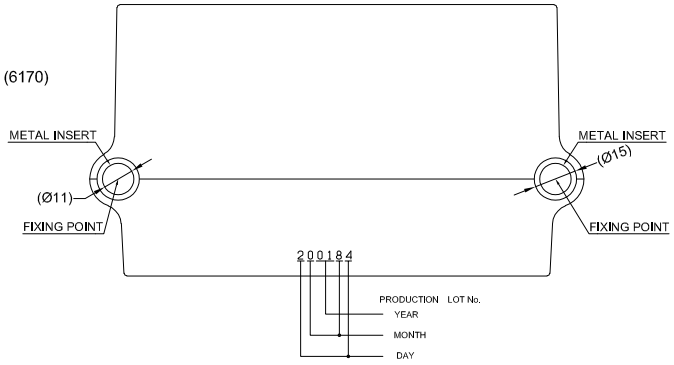

SPECIFICATION:

1. RATED VOLTAGE : 12-24 VOLTS DIRECT CURRENT（WORKING VOLTAGE RANGE 10THRU 32 VOLTS）
2. TEST VOLTAGE : 14–28 VOLTS DIRECT CURRENT
3. RATED CURRENT : 1 AMPERES OR LESS
4. SOUND PRESSURE AT TEST VOLTAGE : MAX 107±4dB(A) - MIN 87±4dB(A)
5. SOUND PRESSURE SELF-ADJUSTING : +5dB±4dB TO EXTERNAL NOISE
6. TONE:WHITE SOUND (BBS)
7. INTERMITTENCE: 70±10 CYCLES PER MINUTE AT TEST VOLTAGES
8. ENVIRONMENTAL TESTS: SAE J994.

NOTES:
1. FOR DEUTSCH CONNECTOR DETAIL REFER TO MANUFACTURERS DETAILS.
2. FOR PRODUCT LABEL AND PACKAGING DETAILS REFER TO MASTER BOM.
3. ANY CUSTOMER MODIFICATION OF THIS PRODUCT CAUSING SUBSEQUENT FAILURE IS NOT A LIABILITY OF BRIGADE ELECTRONICS PLC.

PROPRIETARY NOTICE
THIS DESIGN AND TECHNICAL INFORMATION APPEARING ON THIS DRAWING IS THE PROPERTY OF BRIGADE ELECTRONICS, AND IS DISCLOSED IN CONFIDENCE. IT IS NOT TO BE COPIED, REPRODUCED, REVEALED TO OR EXPROPRIATED BY OTHERS, EITHER IN WHOLE OR IN PART WITHOUT THE EXPRESS WRITTEN CONSENT OF BRIGADE ELECTRONICS.

Customer Approval
MARTIJN VAN OOSTEN

BRIGADE®
www.brigade-electronics.com

Assembly Pl Approval	Approved by	Checked by	Drawn by
J. GREEN	B. CHILDS	W. BEAZLEY	A. FOSTER

Angle of Projection	Units	Scale	Released	Assembly Ref
Third Angle	mm	N/A	03/08/20	-

Status	
RELEASED	SA-BBS-107(DC)
Part No 6170	BE-004386-00-20

FrameV3